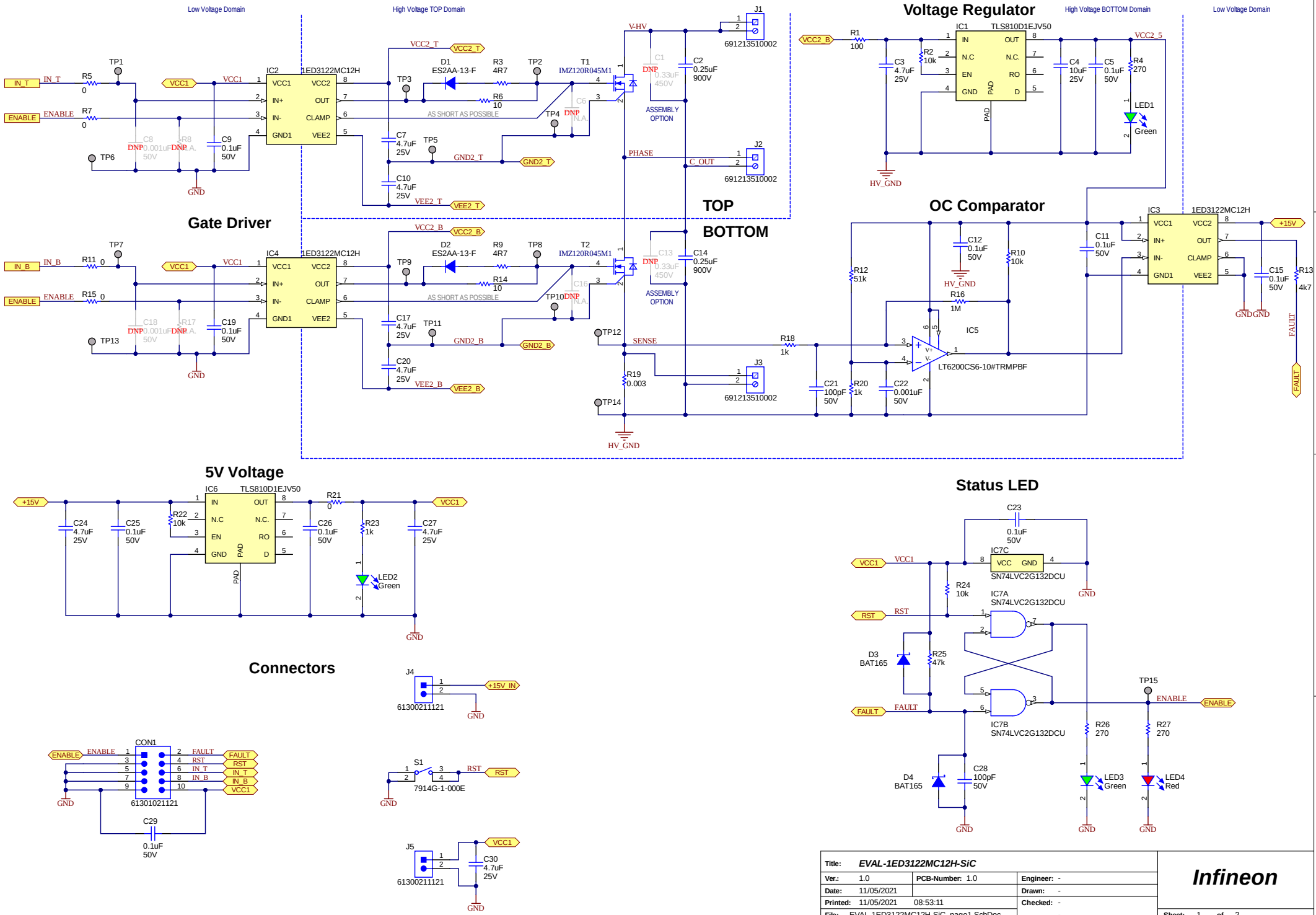
Low Voltage Domain
High Voltage TOP Domain
High Voltage BOTTOM Domain
Low Voltage Domain
Gate Driver
Voltage Regulator
OC Comparator
TOP
BOTTOM
5V Voltage
Status LED
Connectors
IC1 TLS810D1EJV50
IC2 1ED3122MC12H
IC3 1ED3122MC12H
IC4 1ED3122MC12H
IC5 LT6200CS6-10#TRMPBF
IC6 TLS810D1EJV50
IC7A SN74LVC2G132DCU
IC7B SN74LVC2G132DCU
IC7C SN74LVC2G132DCU
J1 691213510002
J2 691213510002
J3 691213510002
J4 61300211121
J5 61300211121
CON1 61301021121
S1 7914G-1-000E
D1 ES2AA-13-F
D2 ES2AA-13-F
D3 BAT165
D4 BAT165
T1 IMZ120R045M1
T2 IMZ120R045M1
AS SHORT AS POSSIBLE
ASSEMBLY OPTION
HV_GND
GND
Title: EVAL-1ED3122MC12H-SiC
Ver.: 1.0
PCB-Number: 1.0
Engineer: -
Date: 11/05/2021
Drawn: -
Printed: 11/05/2021 08:53:11
Checked: -
File: EVAL-1ED3122MC12H-SiC_page1.SchDoc
Infineon
Sheet: 1 of 2

ISOLATED POWER SUPPLY

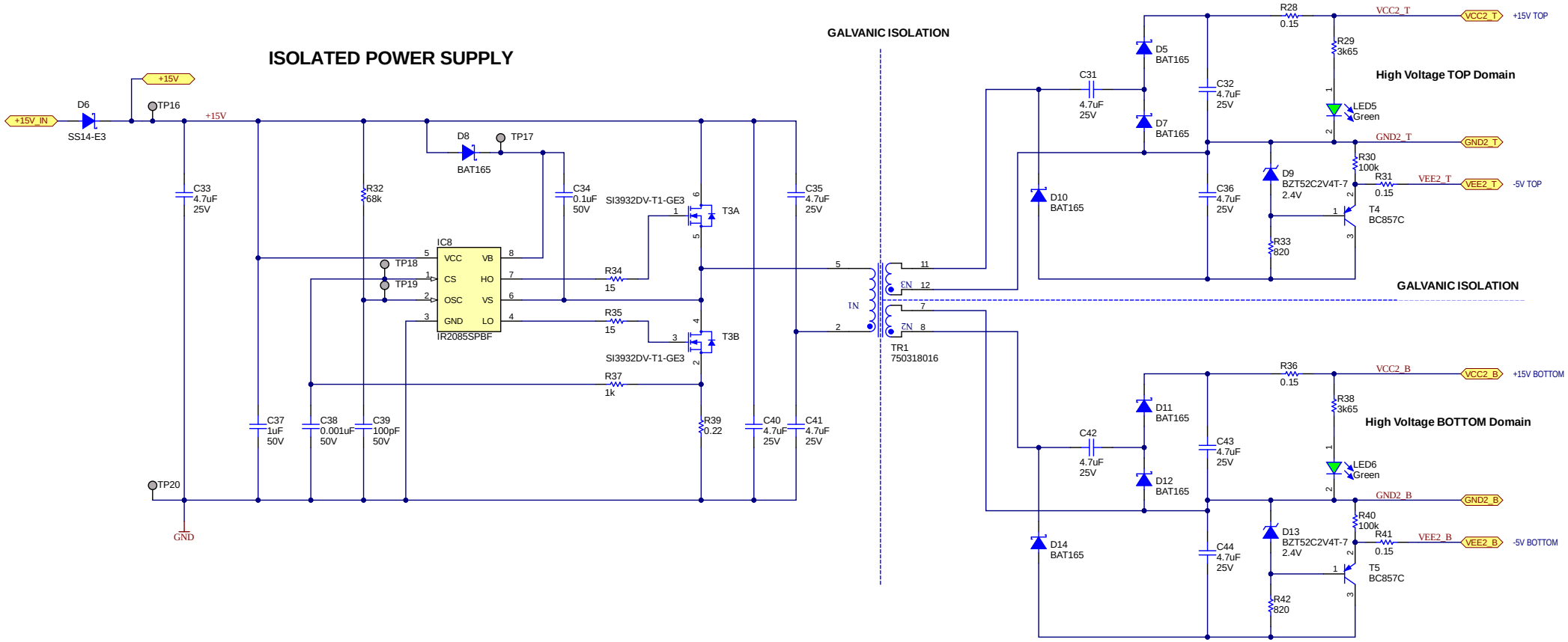

FID1 FID2 FID3

Title:	***EVAL-1ED3122MC12H-SiC***		
Ver.:	1.0	**PCB-Number:** 1.0	**Engineer:** -
Date:	11/05/2021		**Drawn:** -
Printed:	11/05/2021 08:53:11		**Checked:** -
File:	EVAL-1ED3122MC12H-SiC_page2.SchDoc		-

Infineon

Sheet: 2 **of** 2